H-310

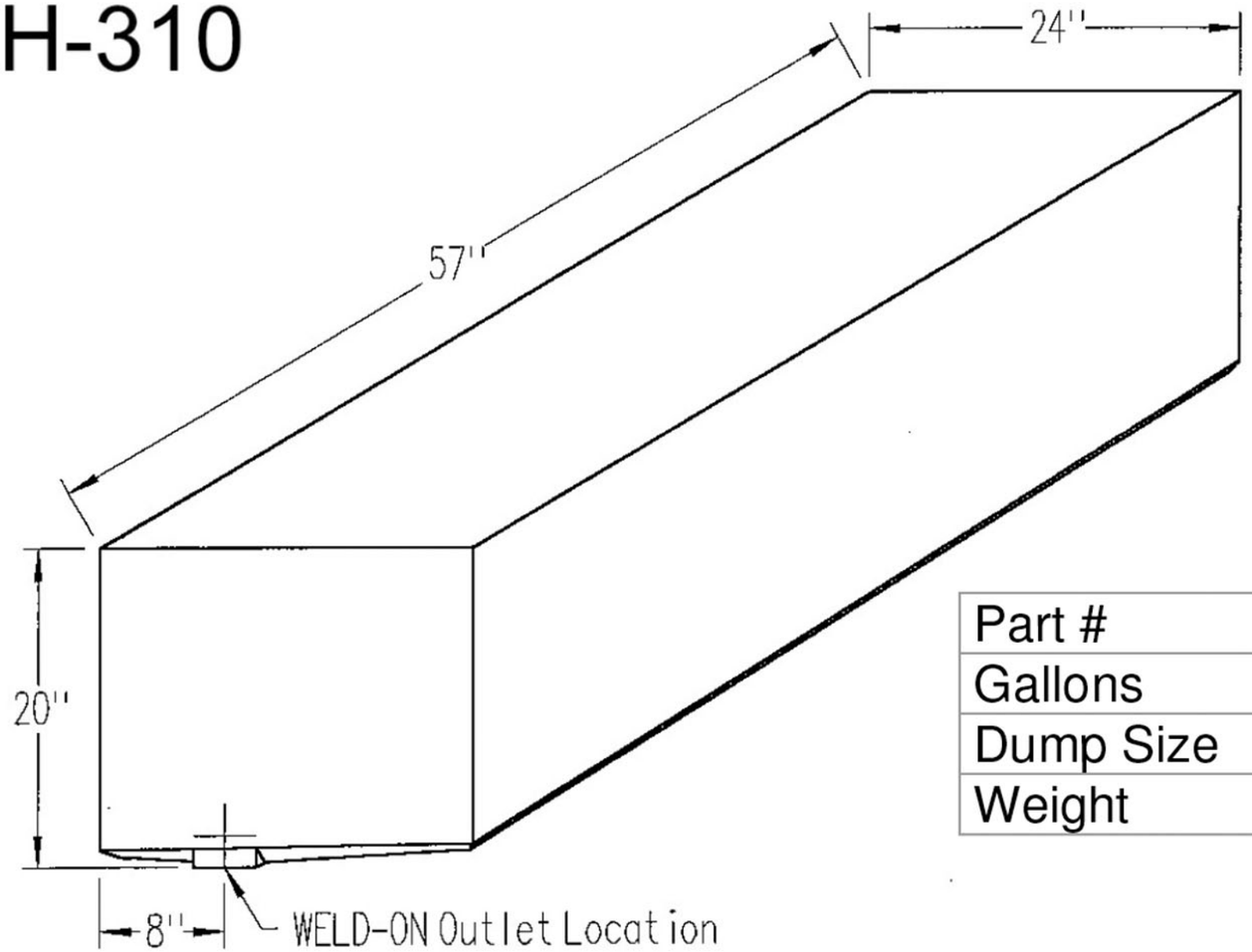

Part #	H-310
Gallons	104
Dump Size	Weld- on
Weight	36 lbs

		UNLESS OTHERWISE SPECIFIED:		NAME	DATE
		DIMENSIONS ARE IN INCHES TOLERANCES: FRACTIONAL ± ANGULAR: MACH ± BEND ± TWO PLACE DECIMAL ± THREE PLACE DECIMAL ±	DRAWN		
			CHECKED		
			ENG APPR.		
			MFG APPR.		
		INTERPRET GEOMETRIC TOLERANCING PER:	Q.A.		
		MATERIAL	COMMENTS:		
NEXT ASSY	USED ON	FINISH			
APPLICATION		DO NOT SCALE DRAWING			

ONE CLARION INC.

TITLE:

104 GALLON HOLDING TANK

SIZE	DWG. NO.	REV
B	H-310	
	WEIGHT:	SHEET 1 OF 1