ZONE	REV.	DESCRIPTION	DATE	APPROVED
3-B	A	MOVED DRAIN. IS: 3.00 WAS: 4.12	10/26/2011	EBW

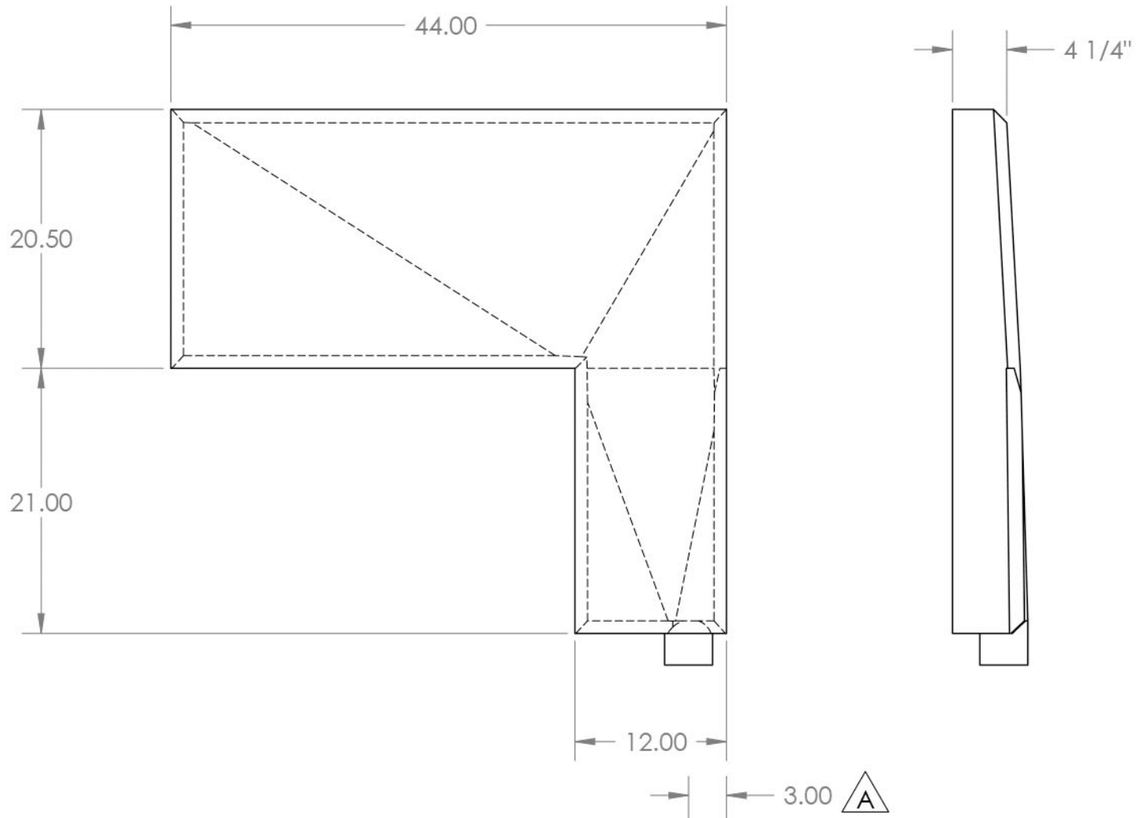

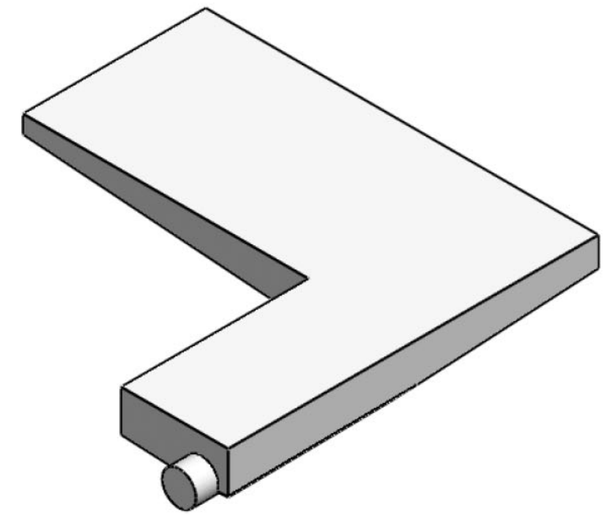

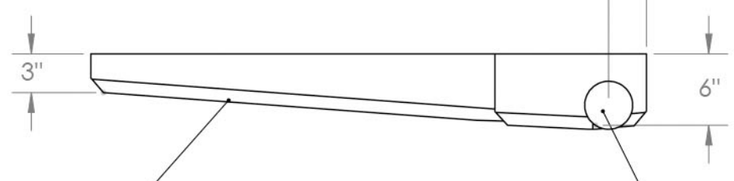

PERMANENTLY IDENTIFIED

3" MOLDED DUMP

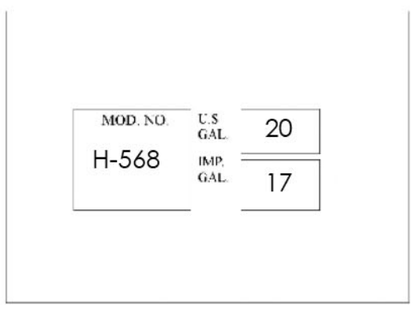

NOTES:

1. MATERIAL: PPOLYETHYLENE
2. AVG. WALL THICKNESS: .15
3. WEIGHT: 15 LBS.
4. ALL DIMENSIONS SHOWN ARE IN INCHES.

		UNLESS OTHERWISE SPECIFIED:		NAME	DATE
		DIMENSIONS ARE IN INCHES TOLERANCES: FRACTIONAL ± ANGULAR: MACH ± BEND ± TWO PLACE DECIMAL ± THREE PLACE DECIMAL ±	DRAWN		
			CHECKED		
			ENG APPR.		
			MFG APPR.		
		INTERPRET GEOMETRIC TOLERANCING PER:	Q.A.		
		MATERIAL	COMMENTS:		
NEXT ASSY	USED ON	FINISH			
APPLICATION		DO NOT SCALE DRAWING			

ONE CLARION INC.

TITLE:

20 GALLON HOLDING TANK

SIZE	DWG. NO.	REV
B	H-568	
	WEIGHT:	SHEET 1 OF 1