# H-210M

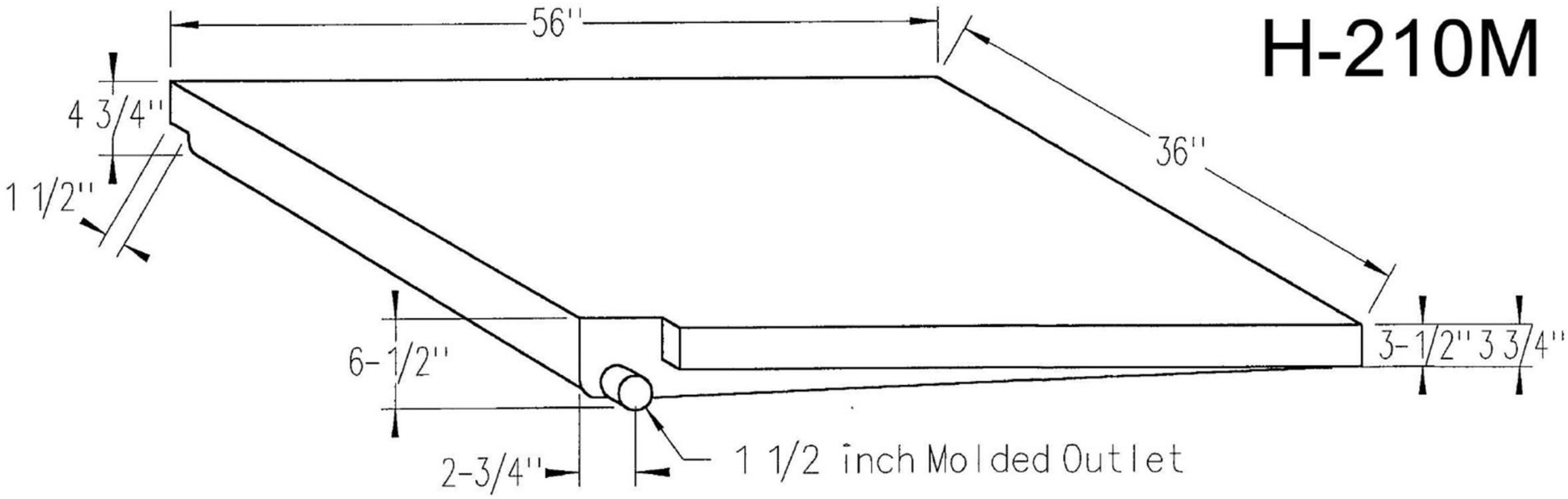


| | |
|---|---|
| Part # | H-210M |
| Gallons | 30 |
| Dump Size | 1 ½” |
| Weight | 24 lbs |

| | | | | | |
|---|---|---|---|---|---|
| | | UNLESS OTHERWISE SPECIFIED: | | NAME | DATE |
| | | DIMENSIONS ARE IN INCHES<br>TOLERANCES:<br>FRACTIONAL ±<br>ANGULAR: MACH ± BEND ±<br>TWO PLACE DECIMAL ±<br>THREE PLACE DECIMAL ± | DRAWN | | |
| | | | CHECKED | | |
| | | | ENG APPR. | | |
| | | | MFG APPR. | | |
| | | INTERPRET GEOMETRIC TOLERANCING PER: | Q.A. | | |
| | | MATERIAL | COMMENTS: | | |
| NEXT ASSY | USED ON | FINISH | | | |
| APPLICATION | | DO NOT SCALE DRAWING | | | |

ONE CLARION INC.

TITLE:

30 GALLON HOLDING TANK

| SIZE | DWG. NO. | REV |
|---|---|---|
| B | H-210M | |
| | WEIGHT: | SHEET 1 OF 1 |