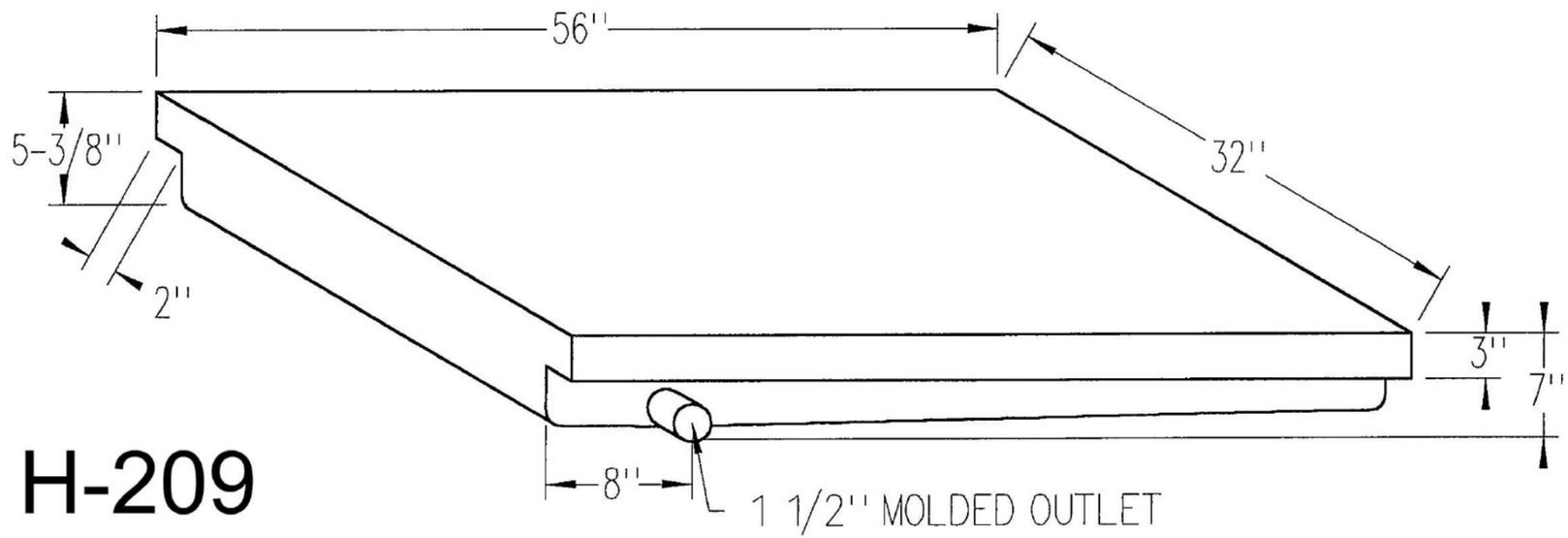

H-209

Part #	H-209
Gallons	41
Dump Size	1 ½"
Weight	24 lbs

		UNLESS OTHERWISE SPECIFIED:		NAME	DATE
		DIMENSIONS ARE IN INCHES TOLERANCES: FRACTIONAL ± ANGULAR: MACH ± BEND ± TWO PLACE DECIMAL ± THREE PLACE DECIMAL ±	DRAWN		
			CHECKED		
			ENG APPR.		
			MFG APPR.		
		INTERPRET GEOMETRIC TOLERANCING PER:	Q.A.		
		MATERIAL	COMMENTS:		
NEXT ASSY	USED ON	FINISH			
APPLICATION		DO NOT SCALE DRAWING			

ONE CLARION INC.

TITLE:

41 GALLON HOLDING TANK

SIZE	DWG. NO.	REV
B	H-209	
	WEIGHT:	SHEET 1 OF 1