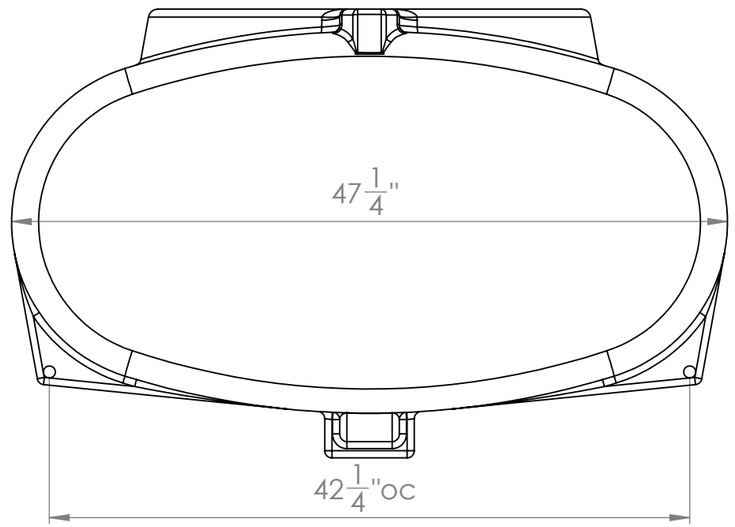

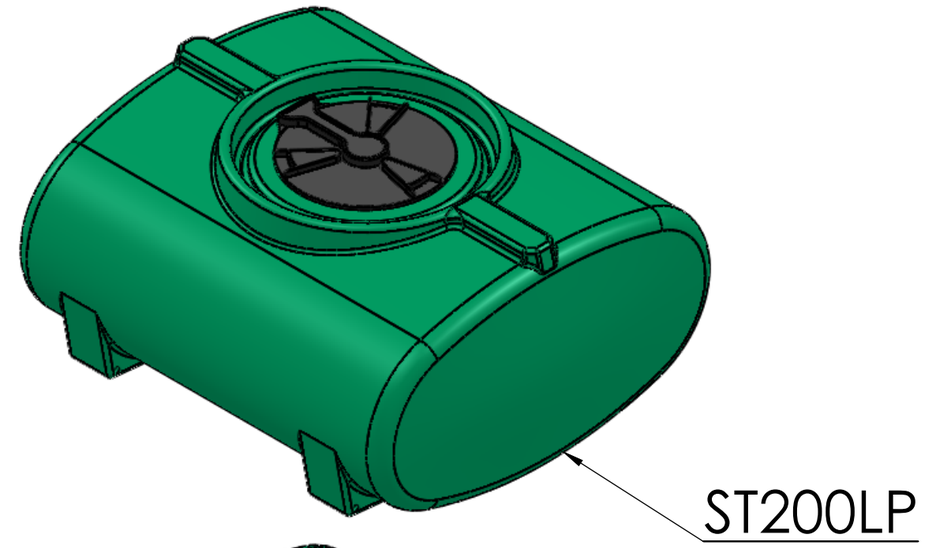

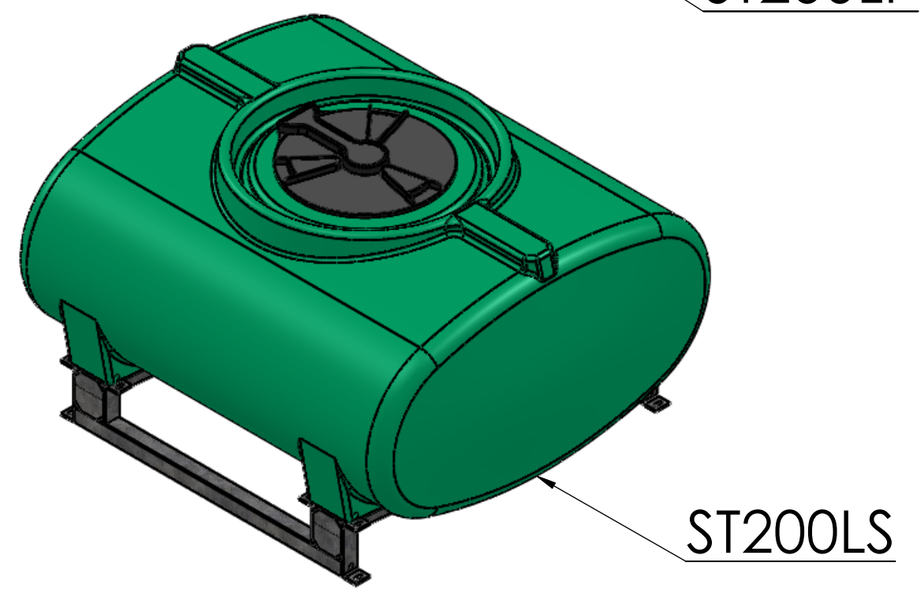

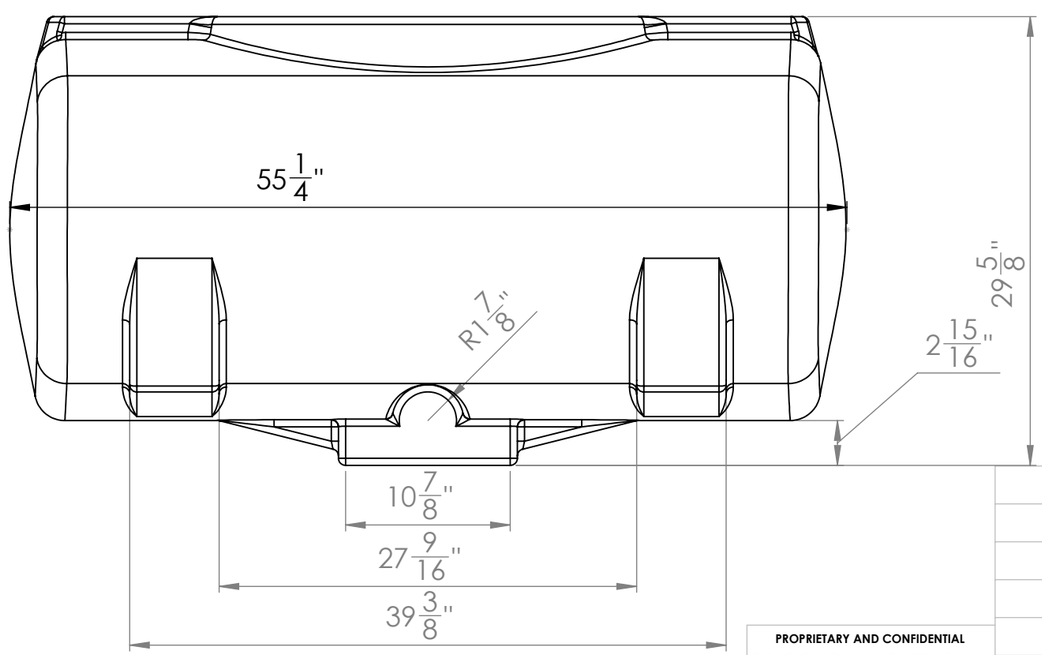

For more information or to get your questions answered, contact us!
www.clarionmunicipal.com or call us at : (+1) 863-261-8388 | info@oneclarion.com

PROPRIETARY AND CONFIDENTIAL

THE INFORMATION CONTAINED IN THIS DRAWING IS THE SOLE PROPERTY OF Agrimaxx, Enduraplas. ANY REPRODUCTION IN PART OR AS A WHOLE WITHOUT THE WRITTEN PERMISSION OF Agrimaxx, Enduraplas, IS PROHIBITED.

NEXT ASSY	USED ON
APPLICATION	

UNLESS OTHERWISE SPECIFIED:

DIMENSIONS ARE IN INCHES
TOLERANCES:
FRACTIONAL ±
ANGULAR: MACH ± BEND ±
TWO PLACE DECIMAL ±
THREE PLACE DECIMAL ±

INTERPRET GEOMETRIC TOLERANCING PER:

MATERIAL

FINISH

DO NOT SCALE DRAWING

	NAME	DATE
DRAWN	DNS	9/12/11
CHECKED		
ENG APPR.		
MFG APPR.		
Q.A.		

COMMENTS:

Enduraplas

TITLE:

ST200LP

SIZE	DWG. NO.	REV
B		1

SCALE: 1:20 WEIGHT: SHEET 1 OF 1