NOZZLE SCHEDULE

ITEM	SIZE	RATING	TYPE	MATL.	PROJ. IN	PROJ. OUT	REMARKS	NOTES
A	20"	U.L.	M.W.	C.S.	STD.	STD.	SINGLE PUNCHED	TIGHT BOLTED
B	10"	U.L.	ADAPT.	C.S.	STD.	STD.	PRIMARY	EMERGENCY VENT OPENING
C	10"	U.L.	ADAPT.	C.S.	STD.	STD.	SECONDARY	EMERGENCY VENT OPENING
D	4"	N.P.T.	CPL.	C.S.	STD.	STD.	-	-
E	2"	N.P.T.	PIPE	C.S.	STD.	STD.	-	MONITORING PORT
F	4"	N.P.T.	W.F.	C.S.	STD.	STD.	-	INTERSTICE FILL
G	6"	N.P.T.	CPL.	C.S.	STD.	STD.	-	-
H	2"	N.P.T.	CPL.	C.S.	STD.	STD.	-	-

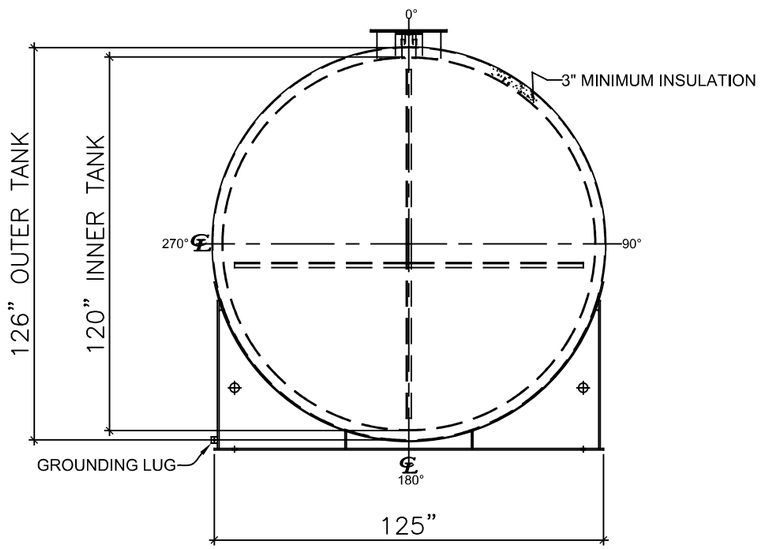

LEFT SIDE

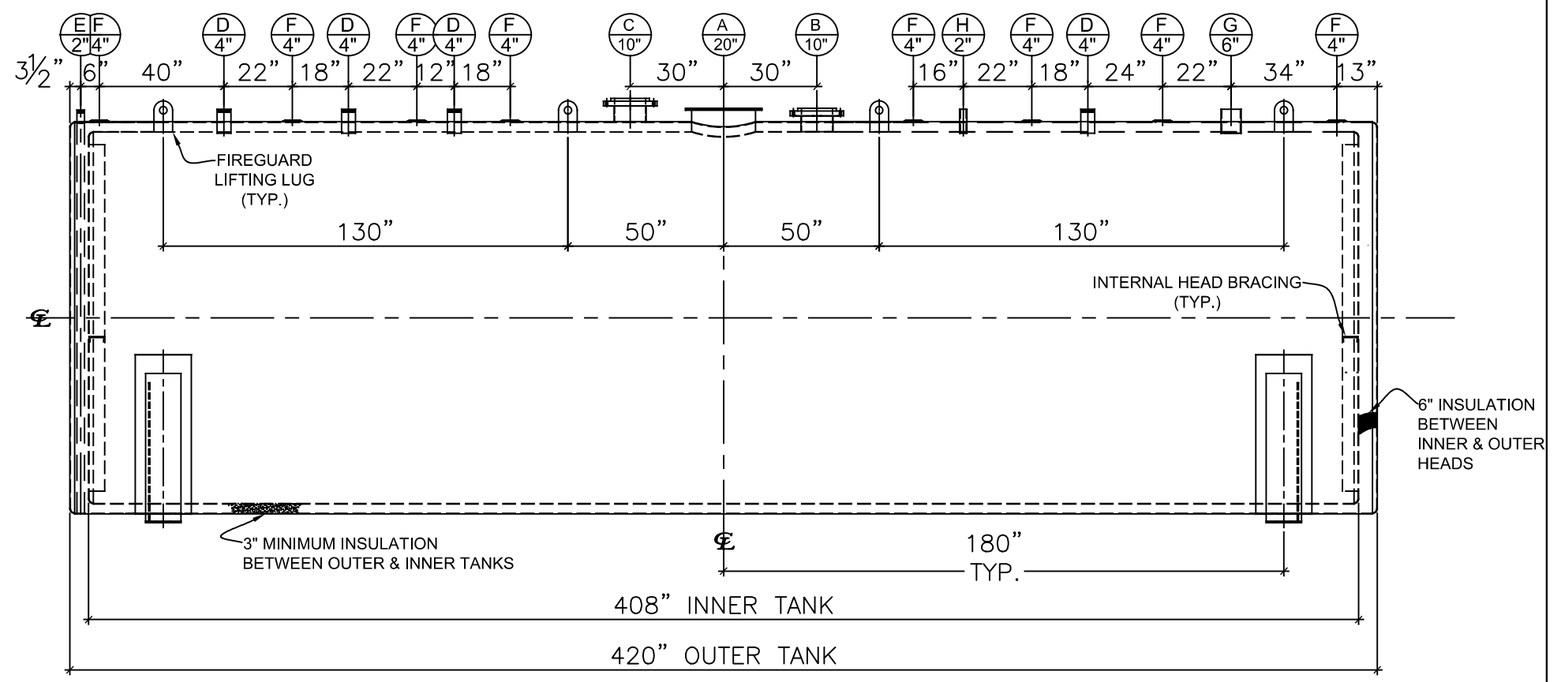

FRONT VIEW

NOTES:

A. Material: H.R. Carbon Steel.
B. Design Pressure: Atmospheric.
C. Design Temperature: Ambient.
D. Built & labeled per U.L. #142, #2085 & STI Fireguard Specifications.
E. Interstice to be filled w/ 3" min. thermal insulation per Fireguard specs.
F. Exterior: Blast & apply one shop coat WHITE enamel.
G. All fittings to be labeled and protected for shipment.
H. Customer to verify nozzle sizes, locations and quantities.
I. Saddles/skids may require shimming or grouting during installation.

APPROVAL FOR CONSTRUCTION
SCHEDULE A - MASTER TERMS & CONDITION OF SALE*

☐ APPROVED AS DRAWN.

☐ APPROVED WITH NOTED CHANGES, CONSTRUCTION WILL BE SCHEDULED WHEN SIGNED DRAWING AND CONFIRMED ORDER ARE RECEIVED.

SIGNATURE:_____

DATE:_____

SALES ORDER:

WEIGHT (LBS): 45900

ONE CLARION
www.clarionmunicipal.com

All units inches unless stated otherwise

DESCRIPTION:

20000 Gallon 120" I.D. x 34'-0" O.A.L. Fireguard Saddle Tank

CUSTOMER:

P.O.#

DATE:	SCALE:	DWG.#	DRAWN BY: AJC
3/8/2023		NB20000FGD120250	SHEET 1 OF 1

This drawing may contain CONFIDENTIAL information and is intended only for the use of the specific individual(s) to which it is addressed